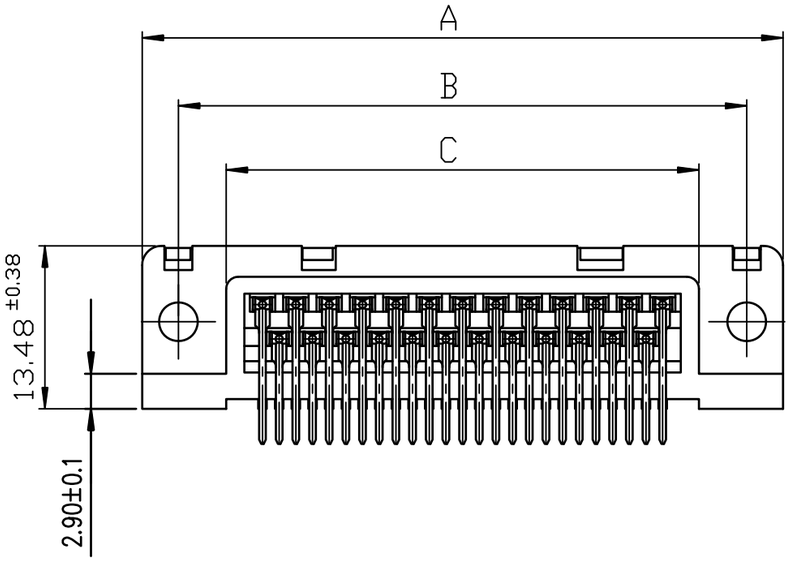

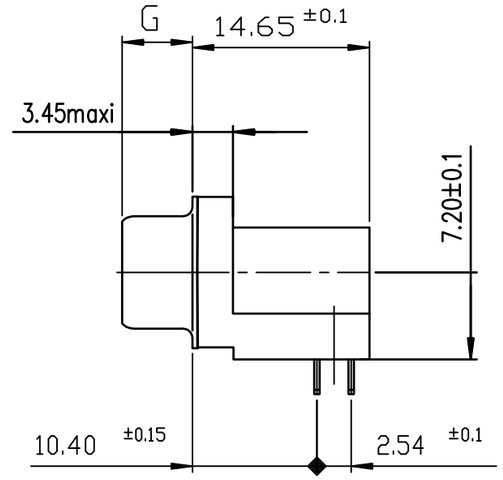

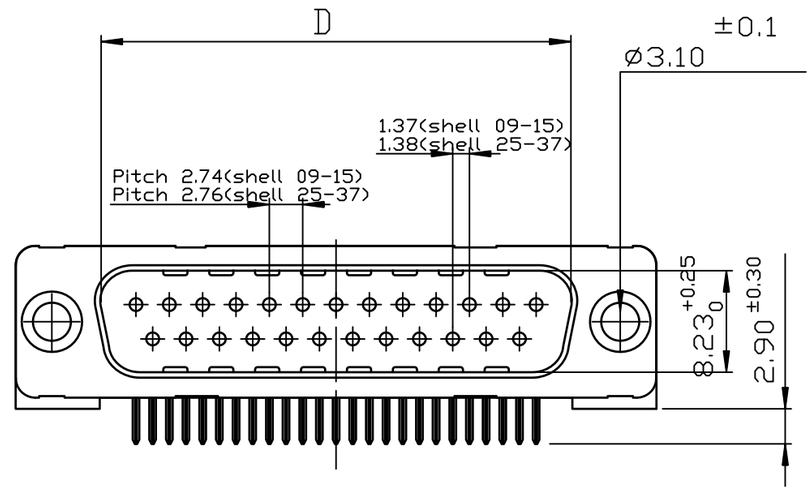

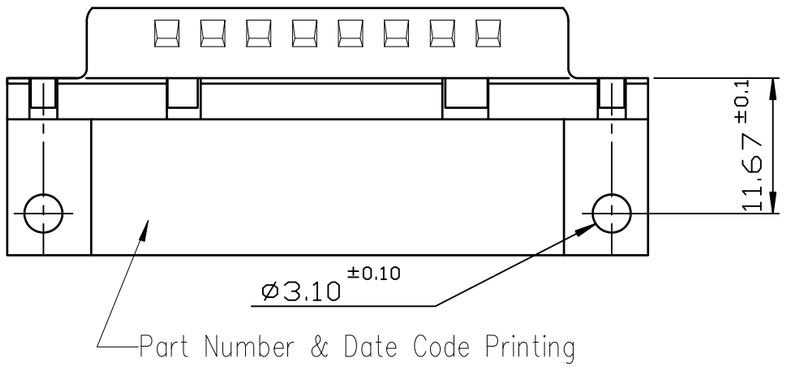

PC card drilling dimensions(after plating)

(thickness 1.60±0.20mm)

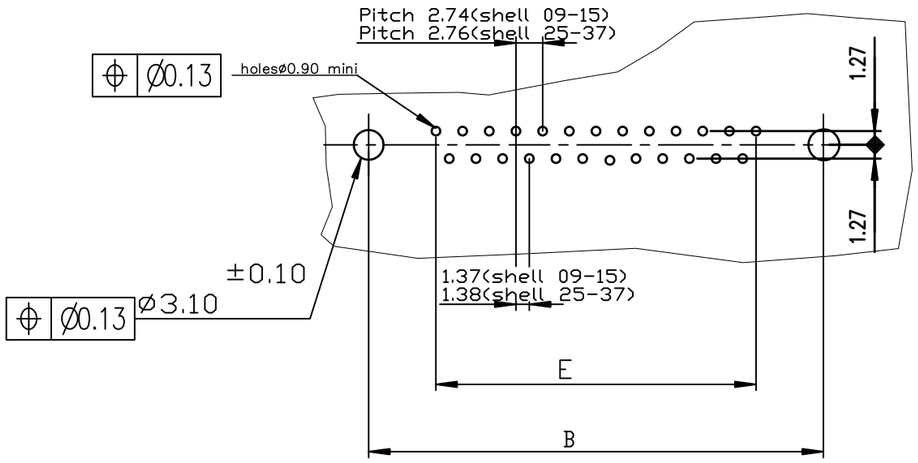

Pull Parts							
SHELL	A±0.38	B±0.12	C±0.10	D±0.25 0	E±0.07	G±0.25 0	PART NUMBER
09	30.81	24.99	16.96	16.79	10.96	5.90	D09P13A*PA00**
15	39.14	33.32	25.18	25.12	19.18	5.90	D15P13A*PA00**
25	53.03	47.04	39.12	38.84	33.12	5.70	D25P13A*PA00**
37	69.32	63.50	55.68	55.30	49.68	5.70	D37P13A*PA00**

4–200 Mating cycles
6–500 Mating cycles

LF FOR LEAD FREE

GENERAL CHARACTERISTICS : SEE DRAWING C01–8646–0000

mat'l. code SEE.NOTES				surface ISO 1302	tolerance ISO 406 ISO 1101	projection	product family D–SUB
ltr	ecn no	dr	date	tolerances unless otherwise specified			title
D	[05-0124	JS	2005/07/27	angles	linear O.X ±0.1	MM	MALE CONNECT. DELTA D RIGHT ANGLED
E	[06-0074	SK	2006/06/08		O.XX ±0.1		SPILL WITHOUT ACCESSORIES
F	ELXI-I-15060	AB	2013/06/25	X±1°	O.XXX±0.1	scale 1:1	
G	ELX-I-18884	AB	2014/09/24	dr JOHN.SLEEBA	2004/08/04	FCI	dwg no C01–8646–0276 sheet 1 of 1 size A3
				engr ALIAS.BABU	2014/09/24		
				chr MITHUN.PAUL	2014/09/24		
				appd BIJU.K.PAUL	2014/09/24		type PRODUCT_CUSTOMER Drawing
sheet index	revision sheet	G 1					

FCIconnect.com
Copyright FCI