THIS COPY IS PROVIDED ON A RESTRICTED BASIS AND IS NOT TO BE USED IN ANY WAY DETRIMENTAL TO THE INTERESTS OF PANDUIT CORP.

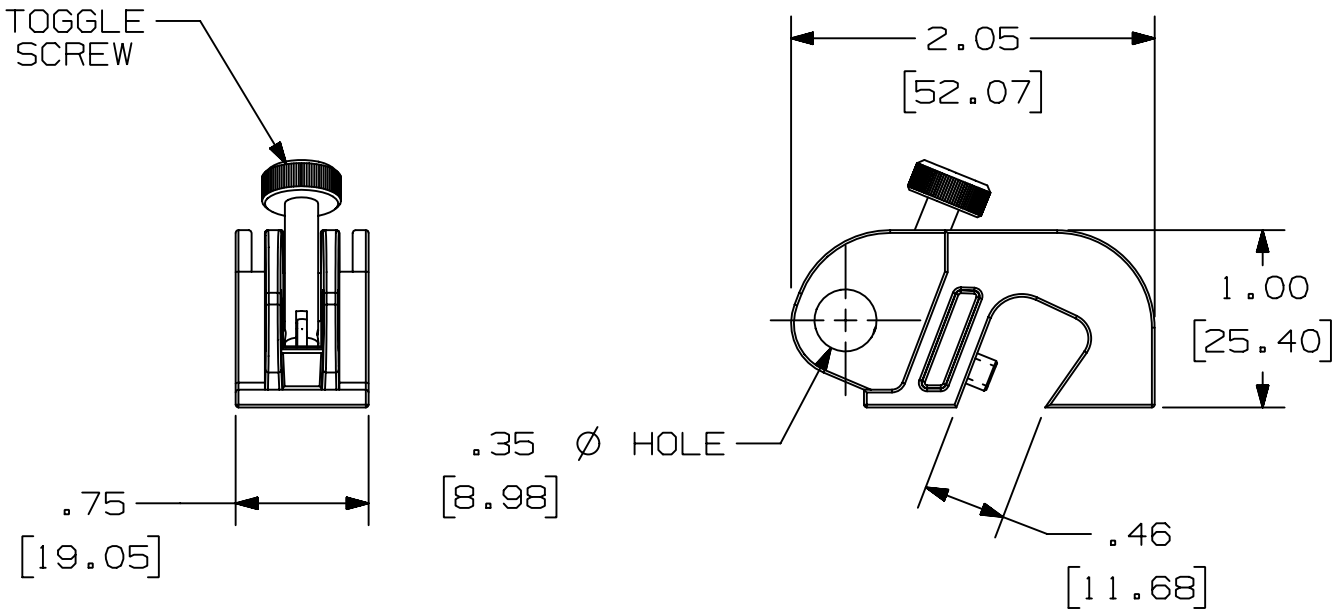

NOTES:
1. MILLIMETERS ARE SHOWN IN BRACKETS.

REV	DATE	BY	CHK	DESCRIPTION	ECN - R		CUST	SUP
R	3-28-03	RVU		DRAWING RELEASE	3224	R		

CAD FILENAME/LAYERS: I00666CE_C10019_PSL-CBNT_00.prt

PANDUIT CORP. TINLEY PARK, ILLINOIS

PSL-CBNT LOCKOUT

UNLESS OTHERWISE SPECIFIED, DIMENSIONAL TOLERANCES ARE:
(.X) ± (.XXX) ±
(.XX) ±.010 [0.25] ANGLES ±

UNLESS OTHERWISE SPECIFIED, ALL DIMENSIONS ARE GIVEN IN INCHES. THIRD ANGLE PROJECTION.

DRAWN BY: RVU
DATE: 3-28-03
CHK'D:

MAT'L: RED NYLON

SCALE: NTS

DRAWING NO.: C10019

DWG SIZE: A